ISSN : 2321-9602

Indo-American Journal of Agricultural and Veterinary Sciences

editor@iajavs.com
iajavs.editor@gmail.com

Indo-Am. J. Agric. & Vet. Sci., 2022

ISSN 2321–9602 www.iajavs.com

Indo-American Journal of Agricultural and Veterinary Sciences

Vol. 10, Issuse 1, March 2022

FOUR CAVITIES DIE CASTING DIE DESIGN AND ESTIMATING COST OF 2-WHEELER PISTON

#1VASAM SETTI DURGA PRASAD, PG STUDENT
#2Mrs.N.VENKATA LAKSHMI (Ph.D), Assistant Professor
DEPARTMENT OF MECHANICAL ENGINEERING
KAKINADA INSTITUTE OF ENGINEEING AND TECHNOLOGY, KAKINADA.

ABSTRACT

I.Pistons are discs within cylinders that move back and forth. It either moves the fluid that enters the cylinder, or it moves the fluid that exits it. The connecting rod acts as a conduit between the expanding gas and the engine's crankshaft, which is where the piston gets its power. Additionally, the piston must dissipate a substantial quantity of heat from the combustion chamber to the cylinder wall.
II.The piston of an Internal Combustion Engine is often made of cast iron, aluminium alloy, or cast steel.
III.Both forged and cast pistons may be used in the production process. The cast piston weighs less and is very stable in terms of dimensions. Mass-produced engines that aren't prone to detonation are the only ones that have this feature. The forged piston, on the other hand, is heavier and less stable in its dimensions.
V.Pro/Engineer software will be used to build a piston for a two-wheeler based on theoretical calculations. Aluminum Alloy is the substance that's been used here.
VII. Casting is the method we employ to make pistons. As a result, a die tool for piston manufacture is required. Four chambers in a casting tool die are the subject of our design work. Die design begins with the extraction of the core and cavity. Core and cavity CNC programmes are created simultaneously. a complete die has been created and is now ready to be manufactured. It is necessary to create a piston prototype. There is also a cost estimate for the die and each component. Pro/Engineer software is used for modelling, core-cavity extraction, die design, and CNC programme development.

IX.**INTRODUCTION TO PISTON**

The piston is a critical component in the operation and output of any engine. There are two primary functions of the piston: it serves as a guide and bearing for the connecting rod, as well as transmitting the cylinder's force to the crankshaft via its connecting rod.
An automobile's engine would not function without its piston, which is the most active and vital part of the engine. When it comes to engines, a Piston is one of the most vital, yet behind-the-scenes, elements. It is responsible for transferring power created in the combustion chambers of an engine to the crankshaft. The power of the combustion explosion is transferred to the crankshaft via this mechanism. There are a number of other jobs that a piston performs, in addition to the main one outlined above. As a seal between the crankcase and the cylinders, it acts as a barrier. The high-pressure mixture in the combustion chambers is prevented from reaching the

© 2022 VASAM SETTI DURGA PRASAD, Mrs.N.VENKATA LAKSHMI. This is an open-access article distributed under the terms of the Creative Commons Attribution 4.0 International License (CC BY 4.0), which permits unrestricted use, distribution and reproduction in any medium, provided the original author and source are credited.
https://creativecommons.org/licenses/by/4.0/

crankcase because of the pistons. Piston Assembly Instructions

Its thicker top section is referred to as the "crown," "head," or "ceiling." The skirt refers to the bottom section. Compression rings and oil rings are accommodated by grooves. The oil ring groove is larger and deeper than the compression ring grooves. To some degree, the oil ring serves to keep the combustion chamber from being overfilled with oil that has flowed in via oil return holes in the piston's interior. The oil ring may be located below the gudgeon pin boss in certain designs. Lands are the spaces between the grooves.To prevent over-expansion of the piston due to thermal expansion during engine operation, the piston is always maintained smaller in diameter than the cylinder. The clearance between the piston and the cylinder wall is called piston clearance. In order to compensate for temperature variations, the piston's crown diameter is somewhat smaller than its skirt diameter. Because of temperature differences as we walk vertically down the skirt, we have a somewhat tapered skirt that allows for uneven expansion owing to this. The Piston's Materials

The piston of an Internal Combustion Engine is often made of cast iron, aluminium alloy, or cast steel. Using cast iron pistons in high-speed engines is not recommended because of their heavier weight. These pistons are stronger and more durable.

Since it has a superior thermal conductivity, the Aluminum Alloy Piston is both lighter and more efficient. About 20% less efficient than an aluminium cylinder, but a lot more efficient than an iron cylinder wall and cast iron piston. More piston clearance is necessary to prevent seizure due to expansion greater than the cylinder wall. During initial startup, the piston slaps and tends to dislodge the crown and skirt of the piston. You may prevent this by making a vertical slot instead of cutting horizontally. So the piston's total diameter isn't lowered so much as to impede the safe functioning of the cylinder walls and pistons because of this notch. A ferrous metal ring is put into the grooves of high-speed engines to extend the life of the grooves and decrease wear. The Piston's Design

The crankshaft bears the brunt of the energy of the explosion resulting from the combustion of the fuel thanks to a piston (the big, heavy part of an engine that rotates due to the movement of the piston). Furthermore, it requires 1000 Psi of pressure, despite the extreme heat it must endure. Piston design is now heavily influenced by the piston's weight. Consider the situation: You'd want the pistons to be able to handle the high heat and pressure, but you also want them to be lightweight and small. With aluminium leading the pack in terms of strength-to-weight ratio; the fact that it is readily machinable, has a remarkable thermal conductivity (can transmit heat fast), and most crucially, it is light weight, aluminium is the material of choice for creating pistons in today's automobiles. Although cast iron is also utilised for pistons, it is employed in a restricted number of applications, such as low-speed engines and the like, because of its weight. When you learn that materials expand when heated, you might have made an educated judgement about what would happen to the piston, because it takes in so much heat. What if it gets trapped in the cylinder when it does? Surely you won't run out of gas. As far as I know, this isn't a problem since the piston is designed to expand. From

You can see in the image above that the crown (the head of the piston) expands more than the other portions of the piston because of the heat it receives. For that reason, it is machined to a diameter somewhat smaller than the remainder of the piston's upper portion (the skirt, mainly). It's also possible to carve a slot in the skirt of the piston to regulate its expansion (the main body of the piston). To keep it from expanding outward and touching the cylinder, as the piston becomes hot, it causes the skirt to shut on its own owing to the metal expanding. A ferrous metal ring is put into the piston grooves of high-speed engines in order to decrease wear and extend their life.

When a piston is fired, the piston's rings, also known as compression rings, are pressed tightly into the piston's grooves. The piston and

cylinder wall wear out before the rings. Thus, we may eliminate the need to repair the piston or cylinder by just changing the same. Piston rings prevent the combustion chamber's high-temperature gases from escaping during the power stroke. Because of its ability to seal and transfer heat to the cylinder walls, piston rings are an essential part of an engine's operation. Each piston in an internal combustion engine should have a minimum of two piston rings. When it comes to larger engines, four or even six piston rings have been employed to increase the power. The I.C.Engine's capacity and size determine the number of rings. Each ring on the cylinder wall must apply a large amount of pressure in order to produce an efficient seal against lubricating oil and high-pressure gas leaks. Using rings that are slightly wider in diameter than the cylinder bore and creating a tiny gap, this effect may be achieved. The piston ring's end gap allows for thermal expansion while also giving the ring some flexibility.Oil Scraper Rings are yet another kind of piston ring. Only the minimum amount of oil necessary to keep the skit properly lubricated may enter the skit via these rings. The oil scraper ring removes the extra oil from the combustion chamber that would otherwise have seeped into the combustion chamber and contributed to carbonization. Piston rings must be carefully mounted over the piston so that the gaps between them do not all fall along the same vertical axis. With a variety of shapes and sizes, piston rings for internal combustion engines may be found. There are three types of oil scraper rings: narrow, broad and tapered.

X. The piston ring will have a long service life because to the high wear resistance provided by the cast iron and silicon mixture. Chromium Tin or Cadmium are the most common platings for passenger vehicle piston rings. The plating extends the useful life of an internal combustion engine by decreasing the pace at which the cylinders wear out.

XI. First conceived by R.P. Pescara, the piston engine was first used in an air compressor. In the years 1930-1960, engine design was a hot issue. In order to achieve symmetrical motion, these first-generation piston engines included two opposed pistons that were physically connected together. Compactness and a vibration-free design were some of the benefits of piston engines over traditional technology. Air compressors were the first practical use of the piston engine principle. The air compressor cylinders of these engines were commonly connected to the moving pistons in a multi-stage arrangement. In some of these engines, the compressor cylinders' residual air is used to return the piston, thereby removing the requirement for a rebound mechanism. Because to its great efficiency, compactness, and low noise and vibration, piston air compressors were widely used. Piston Air Compressor. These units were widely used in large-scale applications including stationary power plants and naval power plants, where a variety of piston gas generators were produced. Such engines have a reputation for exceptional part load performance and high operating flexibility.

XII. PISTON DESCRIPTION

In cylinders, pistons rise and fall, exerting pressure on the fluid inside. Fuel and air can't get into the combustion chamber, and oil can't get into the oil. Piston rings are common on most pistons that are installed in cylinders. As a seal between the piston and the cylinder wall, two spring-compression rings are often used, as well as one or more oil control rings. The piston's head may be flat, bulged, or any other form you like. Forged and cast pistons are also acceptable options. Normally, pistons have a spherical form, however this isn't a must. The hypereutectic piston is a unique sort of cast piston. In both piston engines and hydraulic pneumatic systems, the piston is a critical component. The cylinder's expansion chamber has a wall formed by the piston heads. Inlet and exhaust valves are located on the cylinder head's opposing wall. An expanding gas, often a combination of carbon dioxide and methane, is transformed into mechanical energy by the piston's movement within the cylinderpetrol or diesel and air into mechanical power in the form of a reciprocating linear motion. From

there the power is conveyed through a connecting rod to a crankshaft, which transforms it into a rotary motion, which usually

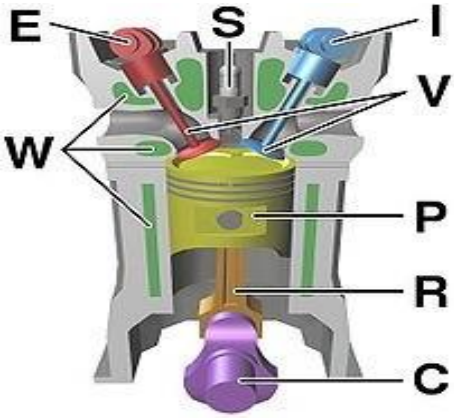

Drives a gearbox through a clutch. Components of a typical, four stroke cycle, DOHC piston engine. (E) Exhaust camshaft, (I) Intake camshaft, (S) Spark plug, (V) Valves, (P) Piston, (R) Connecting rod, (C) Crankshaft, (W) Water jacket for coolant flow.

The main modules are Part Design Assembly

Drawing

Sheet Metal 3D MODEL

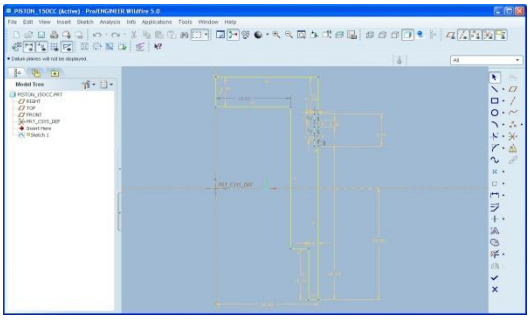

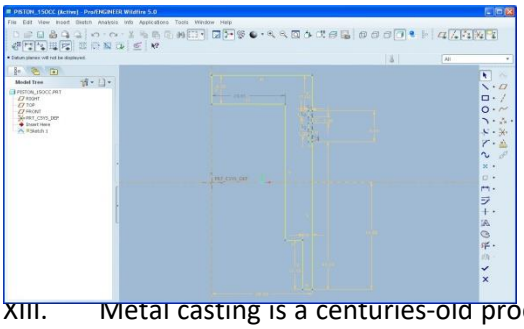

XIII. Metal casting is a centuries-old process. This approach is used to create a wide range of items. Attempting to disseminate casting information is the goal of this article.

XIV. Sand casting, permanent mould casting, plaster casting, and Die casting are all examples of casting. The benefits and drawbacks of each of these castings may be summarised as follows: One of the castings is chosen based on the required product's qualities.

XVI.Casting in sand is the most traditional method. Since 1950, this casting technology has been in use. The sand used in the casting process has an impact on the final product's texture. At the very end, a smooth finish is applied to the final product. Alloys of these

metals are often made of iron or steel; bronze; brass; aluminium; magnesium; and tin or zinc.

XX.

XXI.Permanent mould casting: Two moulds are used in permanent mould casting. Molten metal is poured into this mould after it has been connected to other moulds. Mold parts are removed and the hot metal allowed to cool. Metal extrusions are present in certain items, and they may be removed using a flash grinder or manually. This process is often used to mould metals including tin, lead, and zinc.

XXIV. Making moulds from plaster: Making moulds from plaster is a simple process. The low melting point metals such as copper, zinc, and aluminium are good candidates for this method. Because moulds can be readily formed in the event of a breakdown in the technique, this is the simplest method.

XXVIII.In high- or low-pressure die casting, molten metal is introduced into a mould. Nowadays, high-pressure die casting is employed more often than low-pressure die casting. A well-designed mould may produce intricate objects with remarkable precision and a silky smooth surface finish. Steel, which has a greater melting point, is used in their construction. It is possible to reuse these moulds several times. Casts may be single cavity, multiple cavity, unit die, and combination die. Zinc, copper, aluminium, magnesium, lead, pewter and tin-based alloys are the most often used die casting metals.

XXXII. In order to create pore-free items that do not allow gas to flow through, we may use die casting. Die-casting involves the employment of two different machinery. In cold and hot chamber die casting.

XXXVI. High-fluidity metals benefit from hot-chamber die casting. A goose neck is used to collect the molten metal, which is subsequently fired into the mould. This technique has the benefit of increasing the cycles per minute. However, high melting point metals, such as aluminium, take up iron particles as they melt.

XL.Hot-chamber die casting cannot be utilised in all situations. Metal melts and is delivered to an injector, where it is injected into a mould by the same injector. Dies may be cast from metals with high melting points, although this method is slower than the hot-chamber method.

XLIV. **INTRODUCTION TO DIE CASTING**

To make a metal part, a procedure known as die casting uses two hardened tool steel dies to force molten metal into the mould cavity. Non-ferrous metals, such as zinc, copper, aluminium, magnesium, lead, pewter, and tin-based alloys, are the most common materials used in die casting. A hot- or cold-chamber machine is employed according on the kind of metal being cast.

Because of the high upfront expenditures of the dies and casting equipment, this method is best suited to large-scale manufacturing. Die casting is a basic manufacturing process, requiring just four major stages to produce a single object, resulting in cheap incremental costs. In comparison to other casting processes, die casting generates the most castings in the smallest to medium-sized range. Die castings are characterised by a very good surface finish (by casting standards) and dimensional consistency.

In addition to pore-free die casting, there is direct injection die casting, which is used with zinc castings to decrease scrap and boost yield.

Metals forged in the furnace

The major die casting alloys are: zinc, aluminium, magnesium, copper, lead, and tin; while unusual, ferrous die casting is feasible. Die casting alloys include ZAMAK, zinc aluminium, and aluminium to name a few. The Aluminum. AA 380, AA 384, AA 386, AA 390, and AZ91D magnesium are the Association (AA) specifications. Each metal's benefits may be summarised as follows:

For tiny components, zinc is the most cost-effective and easy-to-cast alloy. It has high ductility, high impact strength, is readily coated, and promotes longer die life.

High dimensional stability for complicated forms and thin walls; strong corrosion

resistance; good mechanical qualities, high thermal and electrical conductivity; keeps strength at higher temperatures; good dimensional stability for aluminium.

• Magnesium: the simplest alloy to process, with a high strength-to-weight ratio and the lightest die cast alloy.

Copper has the greatest mechanical qualities of any die-cast alloys, the best wear resistance, the best dimensional stability, and a strength that rivals steel.

Using high-density, dimensionally precise lead and tin for specialised corrosion resistance applications. For concerns of public health, such alloys are not permitted in foodservice applications.

There are estimated weight restrictions of 70 pounds (32 kg) for aluminium, brass, magnesium, and zinc castings, 10 pounds (5 kg), 44 pounds (20 kg), and

The weights are 75 lb (34 kg) each.

Castings must have a minimum section thickness and a minimum draught depending on the kind of material used. As a general rule, the thickest part should be less than or equal to 13 mm (0.5 in).

Equipment

Die casting machines come in two main varieties: hot-chamber and cold-chamber. Clamping force is used to provide a rating to these clamps. The typical rating ranges from 400 to 4,000 st (pounds per square inch) (2,500 and 25,000 kg).

A mechanism used to heat a chamber

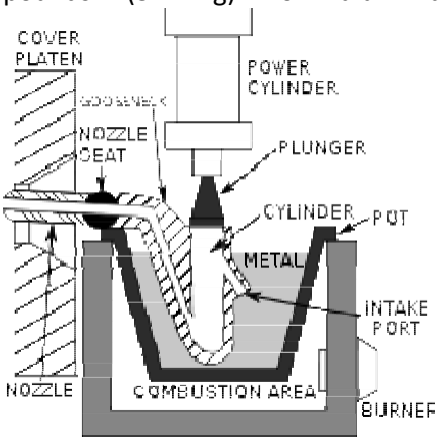

Diagram of a hot-chamber evaporator

A molten metal pool is used to feed the die in hot-chamber machines, also known as gooseneck machines. During the first cycle, the machine's piston retracts to enable the "gooseneck" to fill with the metal. Afterwards, the pneumatic or hydraulic piston pushes this metal into the die. Cycle rates are rapid (about 15 cycles per minute) and melting the metal is simple since it may be done on-the-spot. The downsides of this approach include the inability to employ metals with high melting points and the inability to use aluminium due to the iron it takes up while in the molten pool. These metal-based alloys are the primary reason why hot-chamber machines are used.

Refrigerated chambers

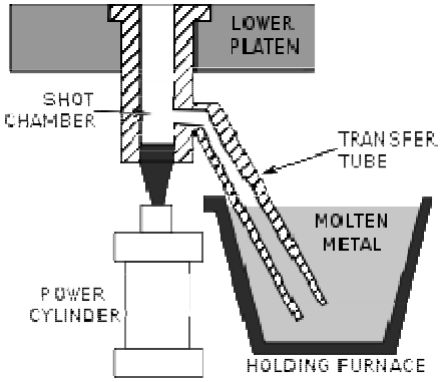

A schematic of a cold-chamber die casting machine.

These are used when the casting alloy cannot be used in hot-chamber machines; these include aluminium, zinc alloys with a large composition of aluminium,

a combination of magnesium and copper is needed. A second furnace is used to melt the metal for these equipment. The molten metal is then carried to the cold-chamber equipment and put into an ice-cold shot chamber before being discharged (or injection cylinder). A hydraulic or mechanical piston then pushes this shot into the die. Due to the requirement to move the molten metal from the furnace to the cold-chamber machine, this technology has a longer cycle time than other alternatives

.

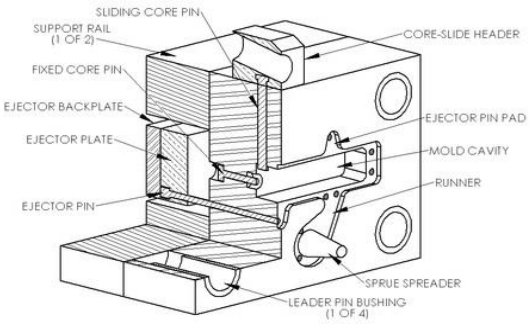

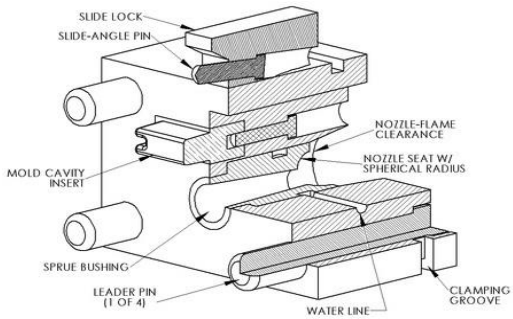

PRO-E MANUFACTURING (MOLD EXTRACTION)

When the two parts of a die are joined together, they generate a hollow similar to that of a casting. The cover die is the part of the die that stays fixed, while the "ejector die" is the part that moves.

It is only possible to remove a component from a mould if the mould is split into two pieces (the core and cavity). As a rule, a part's form should not lead it to get stuck in the mould. As an illustration, consider that the axes of two things are hardly ever parallel (the direction in which the core and cavity separate from each other). Examination of the majority of plastic household items is performed with them slightly inclined (draught).

CORE CAVITY PREPARATION OF MODEL

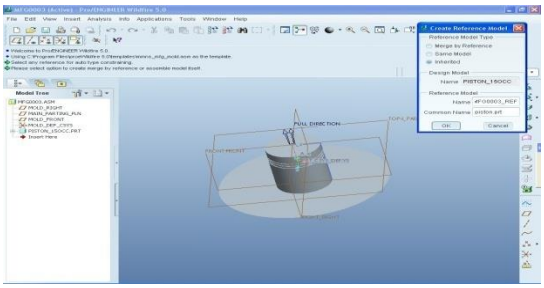

CORE

This will be revealed. As they cool and are removed from the hollow, "bucket-like" parts shrink to the core. However, air ejection, stripper plates, and pins are all viable options for removing material from the core. On the moving side of the tool, ejection plates are the most common, although they may also be found on the stationary half.

Core: The interior shape of the moulding is formed by the core, the male section of the mould.

Female section of the mould: the hollow, which gives the moulding its outward shape.

For aluminium, the shrinkage allowed is 1.3 percent and the mould draught is 1°.

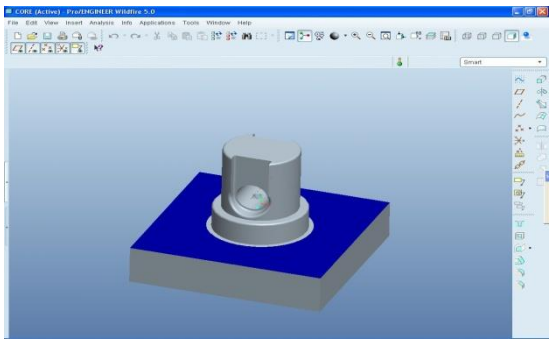

CAVITY

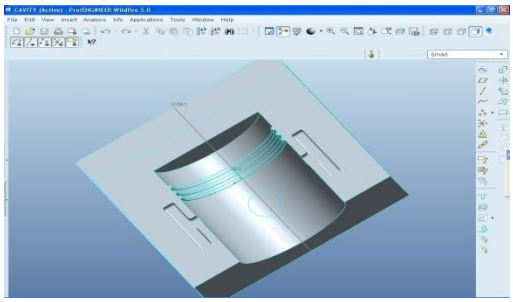

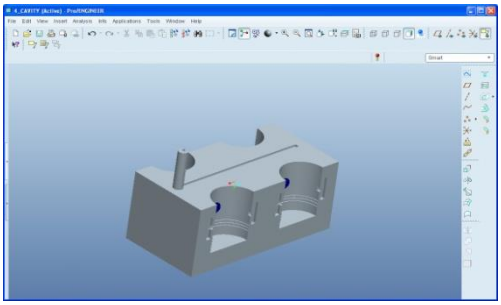

INSERT

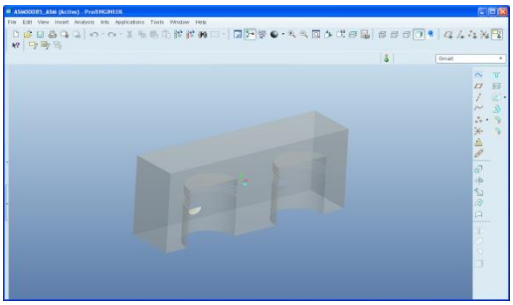

CORE & CAVITY ASSEMBLY

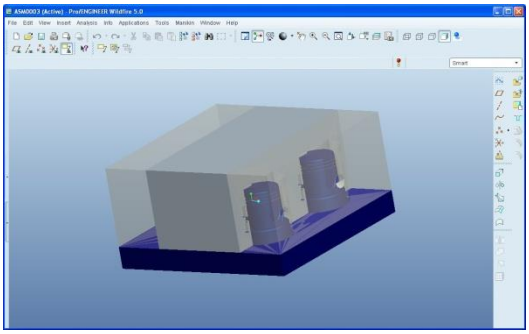

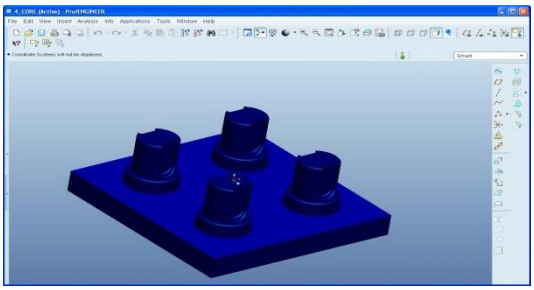

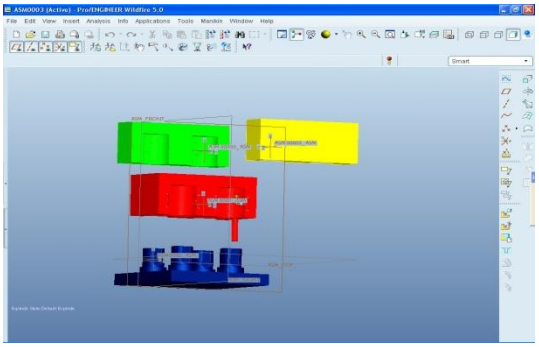

INTRODUCTION TO MANUFACTURING

At diverse stages, the manufacture of a wide range of items is carried out, from simple candlesticks to large-scale machinery like ships and aircraft. The term "manufacturing technology" refers to the commercial industrial production of items for sale and consumption with the use of gadgets and sophisticated machine tools in the later part of the manufacturing spectrum. Products known as raw materials are transformed into finished goods by industrial manufacturing lines.

Technological Innovation in Manufacturing

For example, the field of manufacturing technology covers everything from hand-held equipment like lathes and grinders all the way up to highly advanced computerised numerical

control (CNC) machinery that may be used to produce final items. However, there are several production procedures that may be discussed in more depth, such as casting and forging and alloying and welding and soldering. There are distinct benefits and disadvantages to each of these approaches. As such, they each constitute a distinct body of knowledge in and of itself.

Research in the field of material science

If manufacturing technology doesn't fit the criteria and scope of material science, it might nevertheless be considered a complementary study. Because metals and other materials are used in production, their relevance and understanding cannot be overstated at any time in the area of manufacturing technology Material science focuses on the properties of materials and how they interact with one other. under a variety of conditions and settings, which is essential if those materials are to be used in the production of final goods of any kind.

Many of the ideas and procedures outlined in the previous sections must be mastered by anybody who wants to specialise in manufacturing technology. It is common for students to begin their machine shop training by being familiar with the most fundamental tools and processes, including as filing, drilling, boring, and honing, before moving on to more advanced equipment and methods that require the use of large and flexible machine tools.

Because of advances in science and technology, even manufacturing has expanded its frontiers, resulting in the invention of new materials that are as strong as steel while being many times lighter. One example of this is the demand for light and strong materials for spacecrafts. With the help of other engineering disciplines, mechanical engineering is guaranteed to overcome all boundaries in the near future.

As contrast to discrete and countable pieces, process manufacturing produces huge amounts of commodities. There are a wide range of industrial sectors that are involved in the production of process products.Thermal or chemical transformations need inputs like heat, time, and pressure in the creation of process items. In most cases, the product cannot be dismantled down to its bare components. It is impossible to break down a soft drink into its individual components after it has been made.

Discrete manufacturing, on the other hand, includes the production of individual items that can be numbered and named. Automobiles, equipment, appliances, clothing, toys, and electronics, such as TVs and computers, are all examples of discrete manufacturing businesses.

MILLING

Milling is the process of removing material from a workpiece in order to shape it into a final shape. If you're a novice, you'll need to learn how to use a milling machine, which in its most basic form consists of an oscillating milling cutter that revolves around the spindle axis (similar to a drill).

When working with a workpiece, it's common to move in many directions at once. In most cases, the spindle travels along the z axis. You may lift the tabletop (where the workpiece rests). Milling machines may execute a wide range of sophisticated tasks, such as slot cutting, planing, drilling and threading, rabbeting, routing, etc., either manually or through computer numerical control (CNC).

Vertical and horizontal mills are the most prevalent kinds of mills.

3D models are translated into xyz coordinates that are given into the CNC machine, allowing it to carry out its operations. With a milling machine, a lot of things may be made in 3D, however there are certain elements that need rotation (depending on the need). According on the kind of machine, tolerances are typically in the thousandths of an inch (Unit known as Thou).

A high-temperature coolant is utilised to keep the bit and the material both cool. Directly onto the bit and the substance, in most situations, coolant is sprayed from a high-pressure hose. Depending on the machine, this coolant may either be regulated by the machine or by the operator.

Aluminum, stainless steel, and just about everything in between are all millable materials. Material properties dictate milling tool speed and quantity of material that is removed in one pass for various materials. At slower rates and with smaller quantities of material removed, milling of harder materials is more often done When working with softer materials, a high bit speed is often used.

Using a milling machine incurs additional expenditures throughout the production process. In order to keep the machine from breaking pieces, coolant must be injected on a regular basis each time it is operated. There are times when it is necessary to replace the milling bit. Costs are heavily influenced by the passage of time. Simple pieces may be completed in minutes, whilst complex parts might take hours. Because each component will take a varied length of time to produce, the total manufacturing time will also vary.

When it comes to these equipment, the most important consideration is safety. Scalding hot metal is removed from the workpiece by high-speed bits. A CNC milling machine is advantageous since it safeguards the machine's operator.

PROCEDURE OF MANUFACTURING CAVITY

ROUGHING

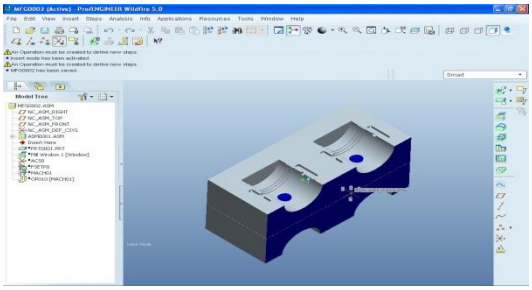

WITH WORKPIECE

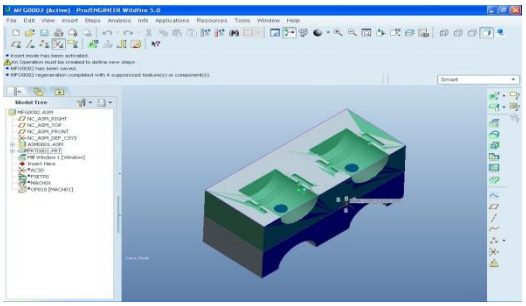

CUTTING TOOL

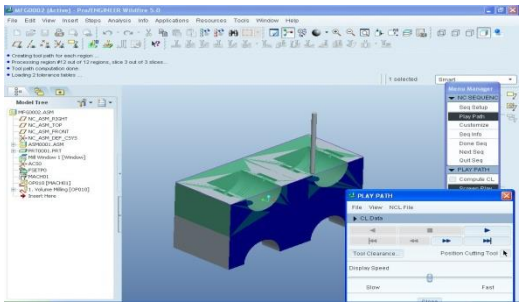

PLAYPATH

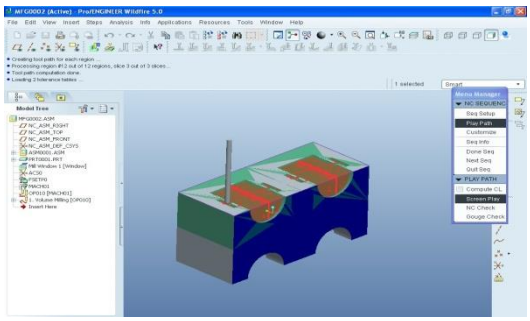

VERICUT

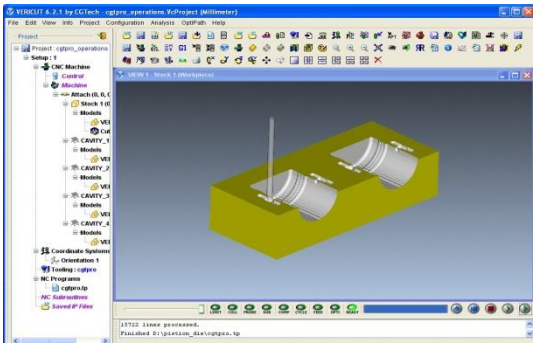

FINISHING

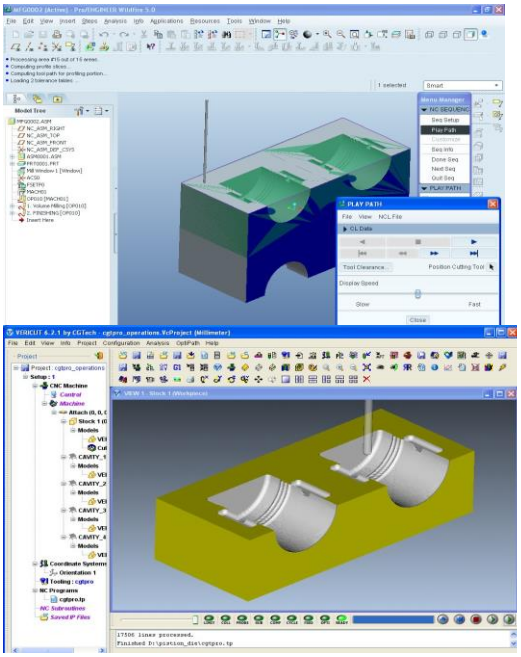

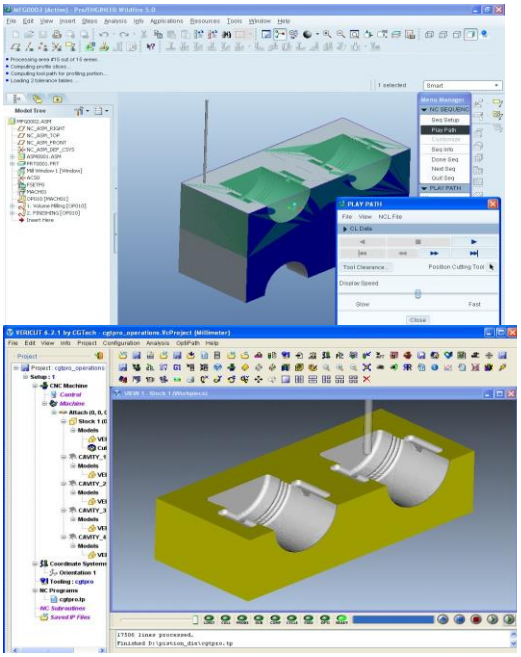

CORE ROUGHING

WITH WORKPIECE

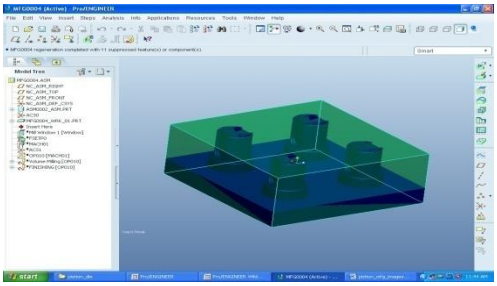

CUTTING TOOL

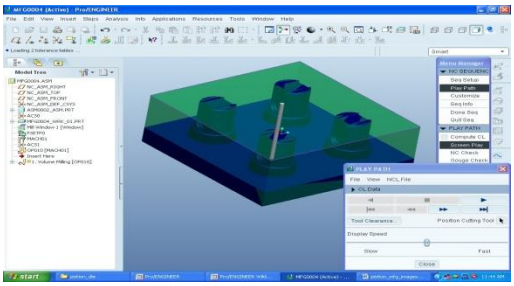

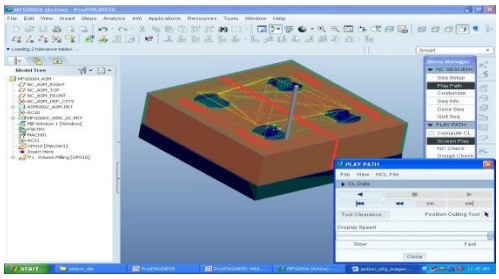

VERICUT

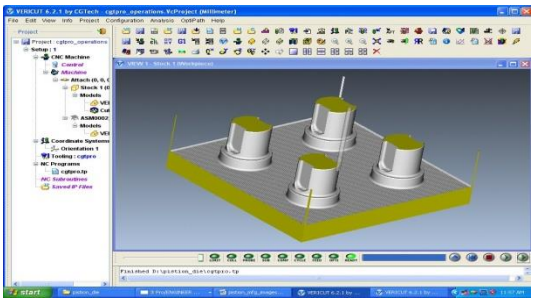

FINISHING

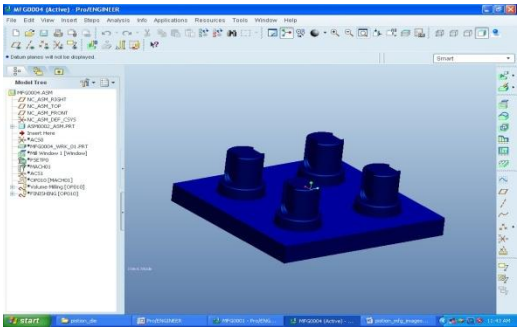

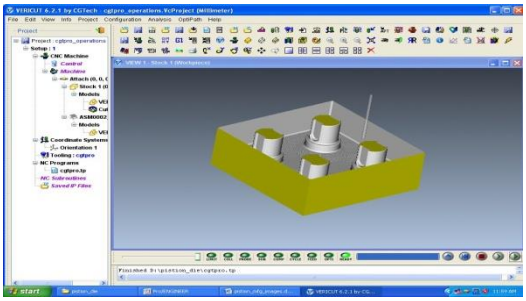

THERMAL ANALYSIS OF PISTON

STEEL material

Save PRO E model as .iges format
→→Ansys → Workbench→ Select analysis system
→ study sate thermal structural → double click
→→Select geometry → right click → import geometry → select browse →open part → ok
→select mesh on work bench → right click →edit

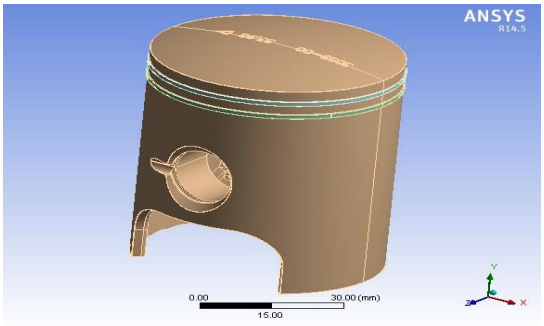

Double click on geometry → select MSBR → edit material →

Density 2810 kg/m³ Young's modulus 46000 MPa Passion ratio 0.23

Select mesh on left side part tree → right click →

generate mesh →

Meshed model

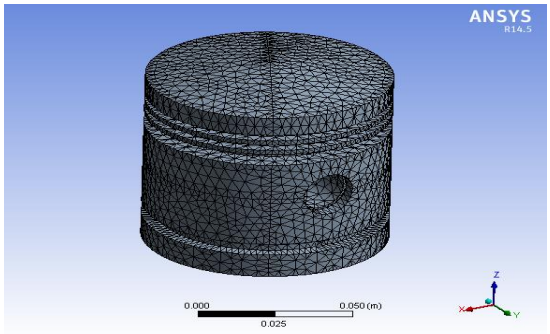

Select static structural right click → insert → select displacement area > pressure area also
Select solution right click → solve → ok
Solution right click → insert → deformation → total
→ Solution right click → insert → strain → equivalent (von-misses) → Solution right click → insert → stress → equitant (von-mises) →Right click on deformation → evaluate all result

IV, CONCLUSION

In our project we have designed a piston used in two wheeler and modeled in 3D modeling software Pro/Engineer.
We have designed 4 cavity die for the manufacturing of piston. We have calculated die
design. The die will need a machine with a capacity of 160 tonnes.
In order to produce pistons, we've created CNC programming for the core and cavity of the die.
We find that this project meets all of the piston design and production criteria.
The cost of the piston has also been included in our estimate. Estimated overall die costs for the piston are $227,333.64; each component costs $66.7688.

BIBLIOGRAPHY

Textbook of Machine Design by R.S.KHURMI and J.K.Gupta 1
2. Willard W. Pulkrabek's "Engineering principles of the internal combustion engine"
3. Budynas-Nisbet Mechanical Engineering Design

the 5th edition of J.mater's Manufacturing Process for Engineering Materials
5. Patric GRANT's Automotive Engineering.
6. Ed. Frank Kreith's Handbook of Mechanical Engineering Modern Manufacturing

Werner's automotive production systems and standar disation are discussed in this chapter.

Willard W. Pulkrabek's Engineering Principles of the Internal Combustion Engine